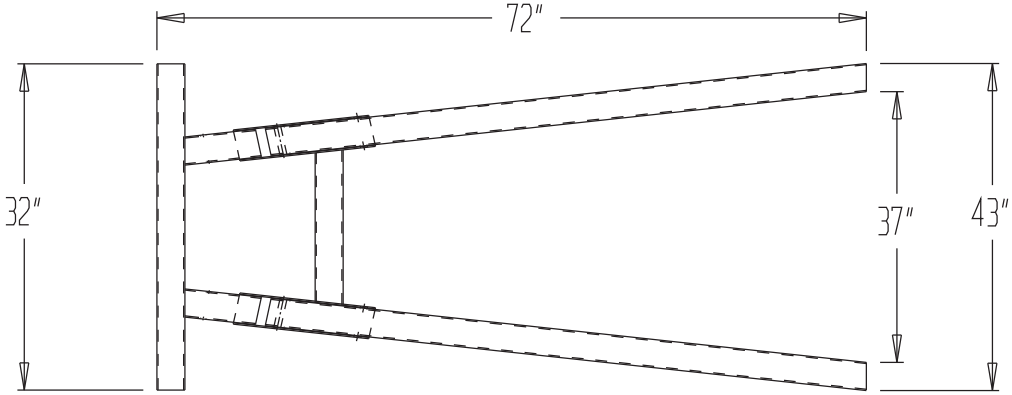

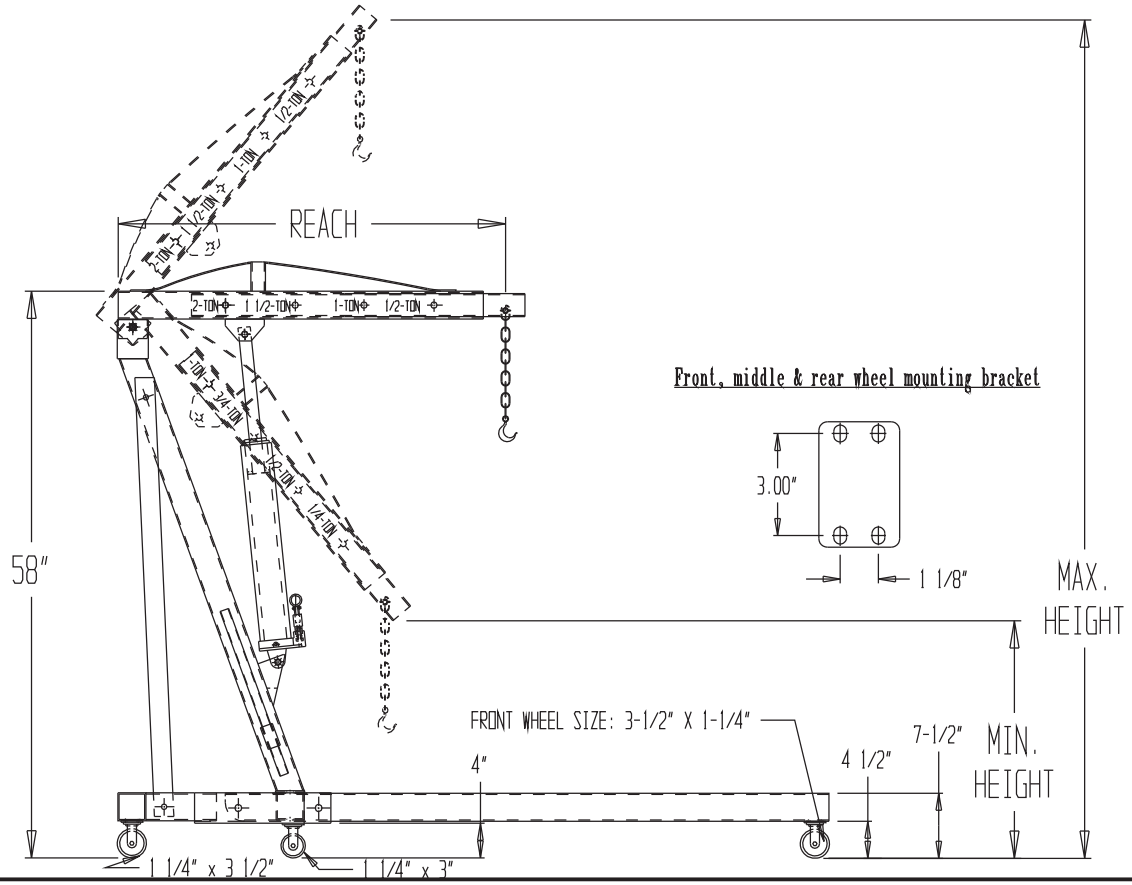

STANDARD FEATURES:

1 - FOLDABLE DESIGN
2 - HEAVY DUTY STEEL CONSTRUCTION.
3 - FIXED LEGS.
4 - PNEUMATIC AND HYDRAULIC DUAL FUNCTION ENGINE HOIST.
5 - ADJUSTABLE BOOM ALLOWS FOR MULTIPLE LIFTING CAPACITY.
6 - 8-TON CAPACITY HYDRAULIC LONG RAM PROVIDES FASTER RISING ACTION, AND A LARGE DIA. RAM TO WITHSTAND ANGLE LOADS.

CAPACITY	2 TON	1 1/2 TON	1 TON	1/2 TON
REACH	39"	46"	53"	61"
MAX. HEIGHT	86"	91"	97"	102"
MIN. HEIGHT	21"	15"	9"	3"

OVERALL SIZE (WXLXH): 43" X 72" X 58"

COLLAPSED SIZE (WXLXH): 32" X 22" X 66"

WEIGHT: 200 LBS.

Approval

This includes my approval of design & dimensions.

Signed: _____

Date: _____

Beacon Industries, Inc.
12300 OLD TESSON RD., ST. LOUIS, MO 63128

SCALE: 1:14	APPROVED BY:	DRAWN BY: T.MAHMOOD
DATE: 05-12-12		SIZE: B

BEHN-40-C-AH - Portable Jib Crane

MATERIAL:	DRAWING NUMBER: TM-050507-001	REV: